SiT9501

Ultra-low Jitter Differential XO for Standard Networking Frequencies

ADVANCED

Description

The SiT9501 is a differential MEMS oscillator that is engineered for low-jitter applications requiring standard networking frequencies from 25 MHz to 644.53125 MHz.

A unique FlexSwing™ output-driver performs like LVPECL but provides independent control of voltage swing and DC offset to simplify interfacing with chipsets having non-standard input voltage requirements and eliminate all external source-bias resistors. The device also integrates multiple on-chip regulators to filter power supply noise, eliminating the need for an external dedicated LDO.

The SiT9501 can be factory programmed for specific combinations of frequency, stability, voltage, output signaling, and pin 1 functionality. Programmability enables designers to optimize clock configurations while eliminating long lead times and customization costs associated with quartz devices where each combination is custom built.

The wide frequency range and programmability makes this device ideal for communications, enterprise, and industrial applications that require a variety of frequencies and operate in noisy environments.

Refer to Manufacturing Notes for proper reflow profile, tape and reel dimension, and other manufacturing related information.

Features

- 14 Standard networking frequencies from 25 MHz to 644.53125 MHz
- 70 fs RMS typical phase jitter, 12 kHz to 20 MHz
- Excellent power-supply noise rejection
- LVPECL, LVDS, HCSL, Low-power HCSL, and FlexSwing signaling options
- ±20, ±25, ±30, and ±50 ppm frequency stabilities
- Wide temperature support up to -40°C to 105°C
- Factory programmable options for low lead time
- 1.8 V, 2.5 V, 3.3 V, and wide continuous range power supply voltage
- 2 x 1.6, 2.5 x 2, 3.2 x 2.5 mm x mm package (Contact SiTime for 7 x 5, and 5 x 3.2 mm x mm packages)

Applications

- 400G/800G network equipment
- Optical modules
- Coherent optics
- Network switches, routers
- Industrial networking equipment

Block Diagram

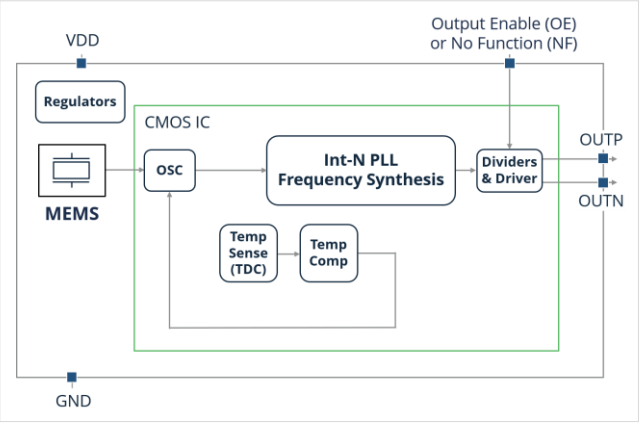

Figure 1. SiT9501 Block Diagram

Package Pinout

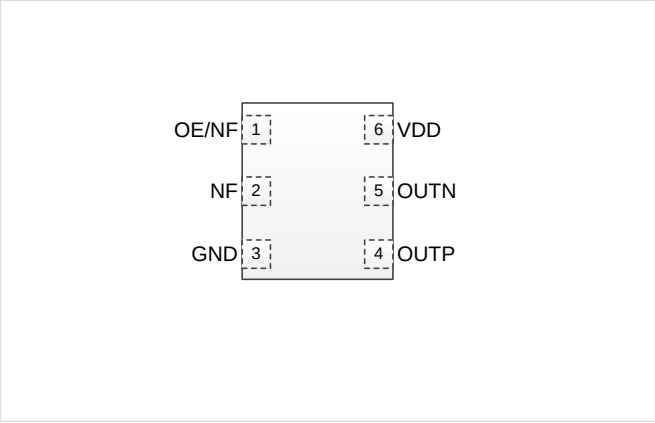

Figure 2. Pin Assignments (Top view)
(Refer to Table 18 for Pin Descriptions)

Typical Phase Jitter (70 fs RMS) and Phase Noise Data

Table 1. Phase Noise for 3.3 V 156.25 MHz LVPECL Device at 25°C

Offset Frequency (Hz)	Phase Noise (dBc/Hz)
100	-87
1k	-114
10k	-141
100k	-151
1M	-152
10M	-165
40M	-170

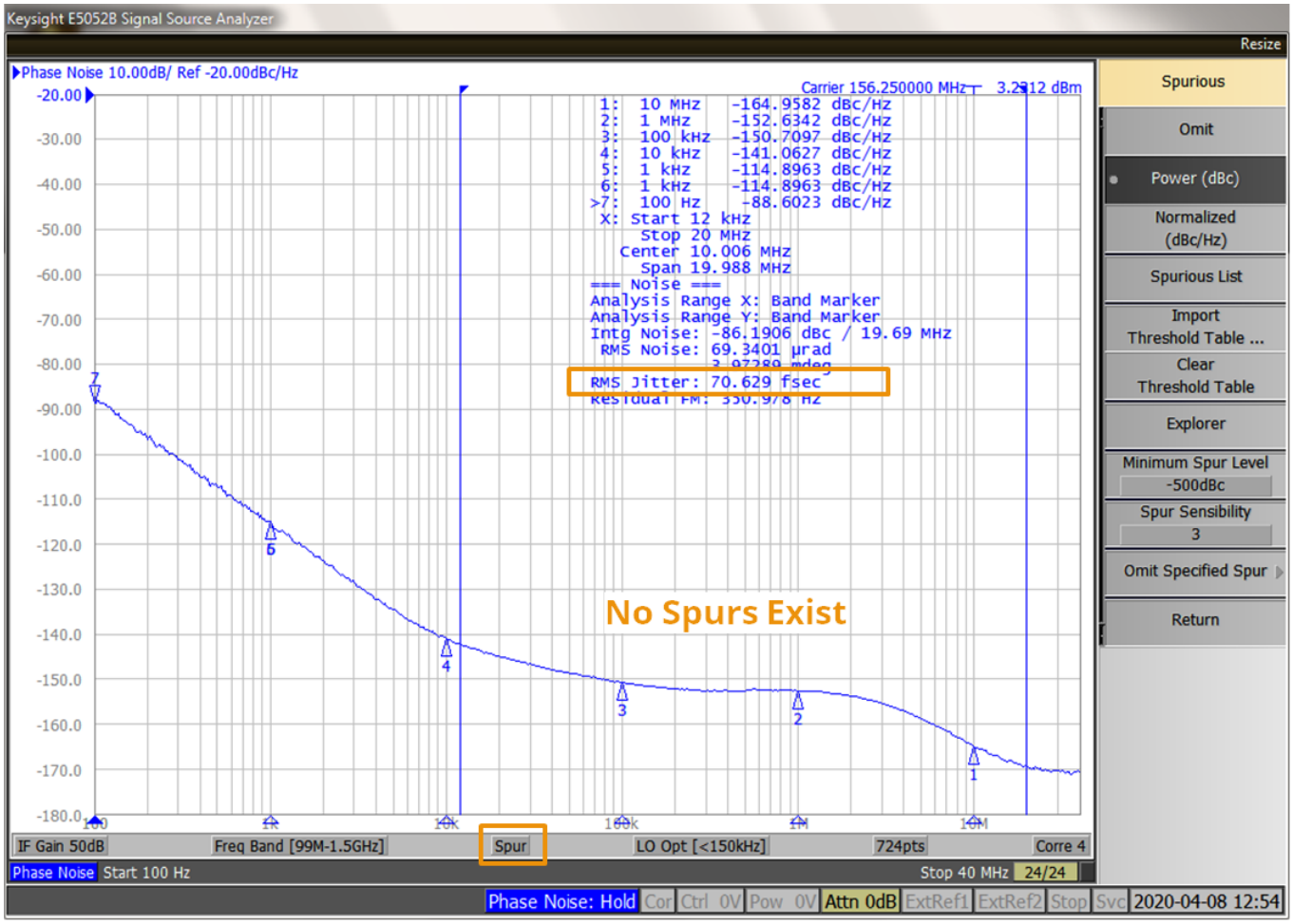

Figure 3. Phase Noise Plot of 3.3 V 156.25 MHz LVPECL Device at 25°C

Ordering Information

SiT9501AC-01B2-3310-125.000000T

Part Family
"SiT9501"

Revision Letter
"A" is the revision of Silicon

Temperature Range
"C": Extended Commercial, -20 to 70°C
"I": Industrial, -40 to 85°C
"B": -40 to 95°C
"E": Extended Industrial, -40 to 105°C

Signaling Group
"-": LVPECL, LVDS, HCSL, Low-power HCSL
"1": FlexSwing referenced to voltage on VDD pin.
"0": FlexSwing referenced to voltage on GND pin.

Signaling Type
"01": LVPECL
"02": LVDS
"04": HCSL
"08": Low-power HCSL, with integrated series termination
2-digit order code: FlexSwing, see Table 5 for 2-digit order code specifying V_Swing, VHn and VLn.

Package Size
"P": 2.0 x 1.6 mm x mm
"A": 2.5 x 2.0 mm x mm
"B": 3.2 x 2.5 mm x mm

Packaging
Refer to Table 2 for packing method
Leave blank for bulk (for sampling only)

Frequency
"25.000000": 25.000000 MHz
"39.062500": 39.062500 MHz
"50.000000": 50.000000 MHz
"53.125000": 53.125000 MHz
"62.500000": 62.500000 MHz
"78.125000": 78.125000 MHz
"125.000000": 125.000000 MHz
"156.250000": 156.250000 MHz
"161.132813": 161.132813 MHz
"250.000000": 250.000000 MHz
"312.500000": 312.500000 MHz
"322.265625": 322.265625 MHz
"625.000000": 625.000000 MHz
"644.531250": 644.531250 MHz

Reserved
"0-": Default

Pin 1 Functionality
"0": NF (no function)
"1": OE active high
"2": OE active low

Supply Voltage
"18": 1.8 V ±5%
"25": 2.5 V ±10%
"33": 3.3 V ±10%
"XX": 2.25 V to 3.63 V
"YY": 1.71 V to 3.63 V

Frequency Stability
"1": ±20 ppm
"2": ±25 ppm
"8": ±30 ppm
"3": ±50 ppm

Table 2. Ordering Codes for Supported Tape & Reel Packing Method

Device Size (mm x mm)	8 mm T&R (3ku)	8 mm T&R (1ku)	8 mm T&R (250u)
2.0 x 1.6	D	E	G
2.5 x 2.0	D	E	G
3.2 x 2.5	D	E	G

TABLE OF CONTENTS

Description 1
Features 1
Applications 1
Block Diagram 1
Package Pinout 1
Typical Phase Jitter (70 fs RMS) and Phase Noise Data 2
Ordering Information 3
Electrical Characteristics 5
Pin Description 14
FlexSwing Configurations 15
Waveform Diagrams 17
Termination Diagrams 20
- LVPECL and FlexSwing Termination 20
- LVDS, Supply Voltage: 1.8 V ±5%, 2.5 V ±10%, 3.3 V ±10%, 2.25 V to 3.63 V, 1.71 V to 3.63 V 21
- HCSL, Supply Voltage: 1.8 V ±5%, 2.5 V ±10%, 3.3 V ±10%, 2.25 V to 3.63 V, 1.71 V to 3.63 V 21
- Low-power HCSL, Supply Voltage: 1.8 V ±5%, 2.5 V ±10%, 3.3 V ±10%, 2.25 V to 3.63 V, 1.71 V to 3.63 V 21

Dimensions and Patterns — 2.0 x 1.6 mm x mm 22
Dimensions and Patterns — 2.5 x 2.0 mm x mm 23
Dimensions and Patterns — 3.2 x 2.5 mm x mm 24
Additional Information 25
Revision History 25

Electrical Characteristics

All Min and Max limits in the Electrical Characteristics tables are specified over operating temperature and rated operating voltage with standard output termination shown in the termination diagrams. Typical values are at 25°C and nominal supply voltage.

Table 3. Electrical Characteristics – Common to All Output Signaling Types

Parameter	Symbol	Min.	Typ.	Max.	Unit	Condition
Frequency Range						
Output Frequency Range	f	Standard frequencies			MHz	Refer to frequencies listed in Ordering Information section.
Frequency Stability						
Frequency Stability	F_stab	–	–	±20	ppm	Inclusive of initial tolerance, operating temperature, rated power supply voltage, load variation of 15 pF ± 10%, and 10 years aging at 25°C
		–	–	±25	ppm	Inclusive of initial tolerance, operating temperature, rated power supply voltage, load variation of 15 pF ± 10%, and first year aging at 25°C
		–	–	±30	ppm	
		–	–	±50	ppm	
10 Year Aging	F_10y	–	±1	–	ppm	Ambient temperature of 25°C
Temperature Range						
Operating Temperature Range	T_use	-20	–	+70	°C	Extended commercial, ambient temperature
		-40	–	+85	°C	Industrial, ambient temperature
		-40	–	+95	°C	Ambient temperature
		-40	–	+105	°C	Extended industrial, ambient temperature
Supply Voltage						
Supply Voltage	Vdd	1.71	–	3.63	V	Voltage-supply order code “YY”
		2.25	–	3.63	V	Voltage-supply order code “XX”
		1.71	1.80	1.89	V	Voltage-supply order code “18”. Contact SiTime for 1.5 V
		2.25	2.50	2.75	V	Voltage-supply order code “25”
		2.97	3.30	3.63	V	Voltage-supply order code “33”
Input Characteristics						
Input Voltage High	VIH	70%	–	–	Vdd	Pins 1 and 2 for OE and SE, respectively
Input Voltage Low	VIL	–	–	30%	Vdd	Pins 1 and 2 for OE and SE, respectively
Input Pull-up Impedance	Z_in	–	100	–	kΩ	Pins 1 and 2 for OE and SE, respectively
Output Characteristics						
Duty Cycle	DC	45	–	55	%	See Figure 6 and Figure 8
Startup, OE and SE Timing						
Startup Time	T_start	–	1	5	ms	Measured from the time Vdd reaches its rated minimum value
Output Enable Time	T_oe	–	–	100+3 clock cycles	ns	Measured from the time OE pin toggles to enable logic level to the time clock pins reach 90% of swing. See Figure 13
Output Disable Time	T_od	–	–	100+3 clock cycles	ns	Measured from the time OE pin toggles to disable logic level to the last clock edge. See Figure 14
Jitter and Phase Noise, f = 156.25 MHz						
RMS Phase Jitter (random)	T_phj	–	70	100	fs	12 kHz to 20 MHz offset frequency integration bandwidth
Spurious Phase Noise	T_spn	–	-110	–	dBc	12 kHz to 20 MHz offset frequency range
RMS Period Jitter[1]	T_jitt_per	–	1	–	ps	
Peak Cycle-to-cycle Jitter[1]	T_jitt_cc	–	6	–	ps	

Note:

1. Measured according to JESD65B.

Table 4. Electrical Characteristics – LVPECL | Supply voltage ("order code"): 2.5 V ±10% ("25"), 3.3 V ±10% ("33"), 2.25 V to 3.63 V ("XX")

Parameter	Symbol	Min.	Typ.	Max.	Unit	Condition
Current Consumption, f = 156.25 MHz						
Current Consumption, Output Enabled without Termination	Idd_oe_nt	–	34	–	mA	Excluding load termination current
Current Consumption, Output Enabled with Termination 1	Idd_oe_wt1	–	47	–	mA	Including load termination current as shown in Figure 18 for Vdd = 3.3 V ±10%, Vdd = 2.25 V to 3.63 V and R3 = 220 Ohms.
		–	45.5	–	mA	Including load termination current as shown in Figure 18 for Vdd = 2.5 V ±10% and R3 = 220 Ohms.
Current Consumption, Output Enabled with Termination 2	Idd_oe_wt2	–	62	–	mA	Including load termination current. See Figure 19 for termination
Current Consumption Output Disabled with Termination 1	Idd_od_wt1	–	56	–	mA	Including load termination current as shown in Figure 18 for Vdd = 3.3 V ±10%, Vdd = 2.25 V to 3.63 V and R3 = 220 Ohms. Driver output is at logic-high voltage levels.
		–	54.5	–	mA	Including load termination current as shown in Figure 18 for Vdd = 2.5 V ±10% and R3 = 220 Ohms. Driver output is at logic-high voltage levels.
Current Consumption, Output Disabled with Termination 2	Idd_od_wt2	–	71	–	mA	Including load termination current. See Figure 19 for termination. Driver output is at logic-high voltage levels.
Output Characteristics						
Output High Voltage	VOH	Vdd-1.025	Vdd-0.95	Vdd-0.88	V	See Figure 5
Output Low Voltage	VOL	Vdd-1.81	Vdd-1.7	Vdd-1.62	V	See Figure 5
Output Differential Voltage Swing	V_Swing	1.2	1.5	1.9	V	See Figure 6
Rise/Fall Time	Tr, Tf	–	170	–	ps	20% to 80%. See Figure 6
Differential Asymmetry, peak-peak	V_da	–	100	–	mV	See Figure 9
Differential Skew, peak	V_ds	–	±40	–	ps	See Figure 10
Overshoot Voltage, peak	V_ov	–	10	–	%	Measured as percent of V_Swing; see Figure 11
Power Supply Noise Immunity						
Power Supply-Induced Jitter Sensitivity[2]	PSJS	–	0.01	–	ps/mV	Power supply ripple from 1 kHz to 20 MHz
Power Supply-Induced Phase Noise	PSPN	–	-80	–	dBc	156.25 MHz, 50 mV peak-peak ripple on VDD

Table 5. Electrical Characteristics – FlexSwing | Supply voltage ("order code") referred to VDD only: 2.5 V ±10% ("25"), 3.3 V ±10% ("33"), 2.25 V to 3.63 V ("XX")

Parameter	Symbol	Min.	Typ.	Max.	Unit	Condition
Current Consumption, f = 156.25 MHz						
Current Consumption, Output Enabled without Termination	Idd_oe_nt	–	34	–	mA	Excluding load termination current
Current Consumption, Output Enabled with Termination	Idd_oe_wt	–	41.5	–	mA	Including load termination current, for FlexSwing order code "ER". See Figure 18 for Vdd = 3.3 V ±10%, Vdd = 2.25 V to 3.63 V, and R3 = 220 Ohms.
		–	40	–	mA	Including load termination current, for FlexSwing order code "ER". See Figure 18 for Vdd = 2.5 V ±10%, and R3 = 220 Ohms.
Current Consumption Output Disabled with Termination	Idd_od_wt	–	50.5	–	mA	Including load termination current, for FlexSwing order code "ER". See Figure 18 for Vdd = 3.3 V ±10%, Vdd = 2.25 V to 3.63 V, and R3 = 220 Ohms. Driver output is at logic-high voltage levels.
		–	49	–	mA	Including load termination current, for FlexSwing order code "ER". See Figure 18 for Vdd = 2.5 V ±10%, and R3 = 220 Ohms. Driver output is at logic-high voltage levels.
Output Characteristics						
Output High Voltage	VOH	VHn - 0.1	VHn	VHn + 0.1	V	See Figure 5, Refer to Table 19 or Table 20 order codes for nominal VOH (i.e. VHn) values.
Output Low Voltage	VOL	VLn - 0.1	VLn	VLn + 0.1	V	See Figure 5, Refer to Table 19 or Table 20 order codes for nominal VOL (i.e. VLn) values
Output Differential Voltage Swing	V_Swing	VOH - VOL			V	See Figure 6
Rise/Fall Time	Tr, Tf	–	170	–	ps	20% to 80%. See Figure 6
Differential Asymmetry, peak-peak	V_da	–	100	–	mV	See Figure 9
Differential Skew, peak	V_ds	–	±40	–	ps	See Figure 10
Overshoot Voltage, peak	V_ov	–	10	–	%	Measured as percent of V_Swing; see Figure 11
Power Supply Noise Immunity						
Power Supply-Induced Jitter Sensitivity[2]	PSJS	–	0.01	–	ps/mV	Power supply ripple from 1 kHz to 20 MHz
Power Supply-Induced Phase Noise	PSPN	–	-80	–	dBc	156.25 MHz, 50 mV peak-peak ripple on VDD

Table 6. Electrical Characteristics – FlexSwing | Supply voltage ("order code") referred to GND, only: 1.8 V ±5% ("18"), 1.71 V to 3.63 V ("YY")

Parameter	Symbol	Min.	Typ.	Max.	Unit	Condition
Current Consumption, f = 156.25 MHz						
Current Consumption, Output Enabled without Termination	Idd_oe_nt	–	34	–	mA	Excluding load termination current
Current Consumption, Output Enabled with Termination	Idd_oe_wt	–	44	–	mA	Including load termination current, for FlexSwing order code "3E". See Figure 18 for Vdd = 1.8 V ±5% and R3 = 220 Ohms.
		–	44	–	mA	Including load termination current, for FlexSwing order code "3E". See Figure 18 for Vdd = 1.71 V to 3.63 V and R3 = 220 Ohms.
Current Consumption Output Disabled with Termination	Idd_od_wt	–	53	–	mA	Including load termination current, for FlexSwing order code "3E". See Figure 18 for Vdd = 1.8 V ±5% and R3 = 220 Ohms. Driver output is at logic-high voltage levels.
		–	53	–	mA	Including load termination current, for FlexSwing order code "3E". See Figure 18 for Vdd = 1.71 V to 3.63 V and R3 = 220 Ohms. Driver output is at logic-high voltage levels.
Output Characteristics						
Output High Voltage	VOH	VHn - 0.1	VHn	VHn + 0.1	V	See Figure 5, Refer to Table 19 or Table 20 order codes for nominal VOH (i.e. VHn) values
Output Low Voltage	VOL	VLn - 0.1	VLn	VLn + 0.1	V	See Figure 5, Refer to Table 19 or Table 20 order codes for nominal VOL (i.e. VLn) values
Output Differential Voltage Swing	V_Swing	VOH - VOL			V	See Figure 6
Rise/Fall Time	Tr, Tf	–	170	–	ps	20% to 80%. See Figure 6
Differential Asymmetry, peak-peak	V_da	–	100	–	mV	See Figure 9
Differential Skew, peak	V_ds	–	±40	–	ps	See Figure 10
Overshoot Voltage, peak	V_ov	–	10	–	%	Measured as percent of V_Swing; see Figure 11
Power Supply Noise Immunity						
Power Supply-Induced Jitter Sensitivity[2]	PSJS	–	0.01	–	ps/mV	Power supply ripple from 1 kHz to 20 MHz
Power Supply-Induced Phase Noise	PSPN	–	-80	–	dBc	156.25 MHz, 50 mV peak-peak ripple on VDD

Table 7. Electrical Characteristics – FlexSwing | Supply voltage ("order code") referred to GND, only: 2.5 V ±10% ("25"), 3.3 V ±10% ("33"), 2.25 V to 3.63 V ("XX")

Parameter	Symbol	Min.	Typ.	Max.	Unit	Condition
Current Consumption, f = 156.25 MHz						
Current Consumption, Output Enabled without Termination	Idd_oe_nt	–	34	–	mA	Excluding load termination current
Current Consumption, Output Enabled with Termination	Idd_oe_wt	–	44	–	mA	Including load termination current, for FlexSwing order code "VP". See Figure 18 for Vdd = 3.3 V ±10% and R3 = 220 Ohms.
Current Consumption Output Disabled with Termination	Idd_od_wt	–	53	–	mA	Including load termination current, for FlexSwing order code "VP". See Figure 18 for Vdd = 3.3 V ±10% and R3 = 220 Ohms. Driver output is at logic-high voltage levels.
Output Characteristics						
Output High Voltage	VOH	VHn - 0.1	VHn	VHn + 0.1	V	See Figure 5, Refer to Table 19 or Table 20 order codes for nominal VOH (i.e. VHn) values
Output Low Voltage	VOL	VLn - 0.1	VLn	VLn + 0.1	V	See Figure 5, Refer to Table 19 or Table 20 order codes for nominal VOL (i.e. VLn) values
Output Differential Voltage Swing	V_Swing	VOH - VOL			V	See Figure 6
Rise/Fall Time	Tr, Tf	–	170	–	ps	20% to 80%. See Figure 6
Differential Asymmetry, peak-peak	V_da	–	100	–	mV	See Figure 9
Differential Skew, peak	V_ds	–	±40	–	ps	See Figure 10
Overshoot Voltage, peak	V_ov	–	10	–	%	Measured as percent of V_Swing; see Figure 11
Power Supply Noise Immunity						
Power Supply-Induced Jitter Sensitivity[2]	PSJS	–	0.01	–	ps/mV	Power supply ripple from 1 kHz to 20 MHz
Power Supply-Induced Phase Noise	PSPN	–	-80	–	dBc	156.25 MHz, 50 mV peak-peak ripple on VDD

Table 8. Electrical Characteristics – LVDS | Supply voltage ("order code"): 2.5 V ±10% ("25"), 3.3 V ±10% ("33"), 2.25 V to 3.63 V ("XX")

Parameter	Symbol	Min.	Typ.	Max.	Unit	Condition
Current Consumption, f = 156.25 MHz						
Current Consumption, Output Enabled without Termination	Idd_oe_nt	–	36	–	mA	Excluding load termination current
Current Consumption, Output Enabled with Termination	Idd_oe_wt	–	40	–	mA	Including load termination current. See Figure 22 for termination.
Current Consumption Output Disabled with Termination	Idd_od_wt	–	49	–	mA	Including load termination current. See Figure 22 for termination. Driver output is at logic-high voltage levels.
Output Characteristics						
Differential Output Voltage	VOD	250	350	450	mV	See Figure 7
Delta VOD	ΔVOD	–	–	50	mV	See Figure 7
Offset Voltage	VOS	1.125	1.2	1.375	V	See Figure 7
Delta VOS	ΔVOS	–	–	50	mV	See Figure 7
Rise/Fall Time	Tr, Tf	–	290	–	ps	Measured 20% to 80% using Figure 22 for termination. See Figure 8
Differential Asymmetry, peak-peak	V_da	–	50	–	mV	See Figure 9
Differential Skew, peak	V_ds	–	±40	–	ps	See Figure 10
Overshoot Voltage, peak	V_ov	–	10	–	%	Measured as percent of VOD; see Figure 12
Power Supply Noise Immunity						
Power Supply-Induced Jitter Sensitivity[2]	PSJS	–	0.01	–	ps/mV	Power supply ripple from 1 kHz to 20 MHz
Power Supply-Induced Phase Noise	PSPN	–	-80	–	dBc	156.25 MHz, 50 mV peak-peak ripple on VDD

Table 9. Electrical Characteristics – LVDS | Supply voltage ("order code"): 1.8 V ±5% ("18"), 1.71 V to 3.63 V ("YY")

Parameter	Symbol	Min.	Typ.	Max.	Unit	Condition
Current Consumption, f = 156.25 MHz						
Current Consumption, Output Enabled without Termination	Idd_oe_nt	–	36	–	mA	Excluding load termination current
Current Consumption, Output Enabled with Termination	Idd_oe_wt	–	40	–	mA	Including load termination current. See Figure 21 and Figure 22 for termination.
Current Consumption Output Disabled with Termination	Idd_od_wt	–	49	–	mA	Including load termination current. See Figure 21 and Figure 22 for termination. Driver output is at logic-high voltage levels.
Output Characteristics						
Differential Output Voltage	VOD	250	350	450	mV	See Figure 7
Delta VOD	ΔVOD	–	–	50	mV	See Figure 7
Offset Voltage	VOS	1.125	1.2	1.375	V	See Figure 7
Delta VOS	ΔVOS	–	–	50	mV	See Figure 7
Rise/Fall Time	Tr, Tf	–	290	–	ps	Measured 20% to 80% using Figure 22 for termination. See Figure 8
Differential Asymmetry, peak-peak	V_da	–	50	–	mV	See Figure 9
Differential Skew, peak	V_ds	–	±40	–	ps	See Figure 10
Overshoot Voltage, peak	V_ov	–	10	–	%	Measured as percent of VOD; see Figure 12
Power Supply Noise Immunity						
Power Supply-Induced Jitter Sensitivity[2]	PSJS	–	0.01	–	ps/mV	Power supply ripple from 1 kHz to 20 MHz
Power Supply-Induced Phase Noise	PSPN	–	-80	–	dBc	156.25 MHz, 50 mV peak-peak ripple on VDD

Table 10. Electrical Characteristics – HCSL | Supply voltage ("order code"): 2.5 V ±10% ("25"), 3.3 V ±10% ("33"), 2.25 V to 3.63 V ("XX")

Parameter	Symbol	Min.	Typ.	Max.	Unit	Condition
Current Consumption, f = 156.25 MHz						
Current Consumption, Output Enabled without Termination	Idd_oe_nt	–	32	–	mA	Excluding load termination current
Current Consumption, Output Enabled with Termination	Idd_oe_wt	–	47	–	mA	Including load termination current. See Figure 23 for termination
Current Consumption, Output Disabled with Termination	Idd_od_wt	–	55	–	mA	Including load termination current. See Figure 23 for termination. Driver output is at logic-high voltage levels.
Output Characteristics						
Output High Voltage	VOH	0.60	0.7	0.95	V	See Figure 5
Output Low Voltage	VOL	-0.1	0	0.1	V	See Figure 5
Output Differential Voltage Swing	V_Swing	1	1.4	1.6	V	See Figure 6
Rise/Fall Time	Tr, Tf	–	400	–	ps	Measured 20% to 80%. See Figure 6
Differential Asymmetry, peak-peak	V_da	–	100	–	mV	See Figure 9
Differential Skew, peak	V_ds	–	±40	–	ps	See Figure 10
Overshoot Voltage, peak	V_ov	–	10	–	%	Measured as percent of V_Swing; see Figure 11
Power Supply Noise Immunity						
Power Supply-Induced Jitter Sensitivity[2]	PSJS	–	0.01	–	ps/mV	Power supply ripple from 1 kHz to 20 MHz
Power Supply-Induced Phase Noise	PSPN	–	-80	–	dBc	156.25 MHz, 50 mV peak-peak ripple on VDD

Table 11. Electrical Characteristics – HCSL | Supply voltage ("order code"): 1.8 V ±5% ("18"), 1.71 V to 3.63 V ("YY")

Parameter	Symbol	Min.	Typ.	Max.	Unit	Condition
Current Consumption, f = 156.25 MHz						
Current Consumption, Output Enabled without Termination	Idd_oe_nt	–	32	–	mA	Excluding load termination current
Current Consumption, Output Enabled with Termination	Idd_oe_wt	–	47	–	mA	Including load termination current. See Figure 23 for termination
Current Consumption, Output Disabled with Termination	Idd_od_wt	–	55	–	mA	Including load termination current. See Figure 23 for termination. Driver output is at logic-high voltage levels.
Output Characteristics						
Output High Voltage	VOH	0.60	0.7	0.95	V	See Figure 5
Output Low Voltage	VOL	-0.1	0	0.1	V	See Figure 5
Output Differential Voltage Swing	V_Swing	1	1.4	1.6	V	See Figure 6
Rise/Fall Time	Tr, Tf	–	400	–	ps	Measured 20% to 80%. See Figure 6
Differential Asymmetry, peak-peak	V_da	–	100	–	mV	See Figure 9
Differential Skew, peak	V_ds	–	±40	–	ps	See Figure 10
Overshoot Voltage, peak	V_ov	–	10	–	%	Measured as percent of V_Swing; see Figure 11
Power Supply Noise Immunity						
Power Supply-Induced Jitter Sensitivity[2]	PSJS	–	0.01	–	ps/mV	Power supply ripple from 1 kHz to 20 MHz
Power Supply-Induced Phase Noise	PSPN	–	-80	–	dBc	156.25 MHz, 50 mV peak-peak ripple on VDD

Table 12. Electrical Characteristics – Low Power HCSL | Supply voltage ("order code"): 2.5 V ±10% ("25"), 3.3 V ±10% ("33"), 2.25 V to 3.63 V ("XX")

Parameter	Symbol	Min.	Typ.	Max.	Unit	Condition
Current Consumption, f = 156.25 MHz						
Current Consumption, Output Enabled without Termination	Idd_oe_nt	–	35	–	mA	Excluding load termination current
Current Consumption, Output Enabled with Termination	Idd_oe_wt	–	37	–	mA	Including load termination current for 5 pF loading at 156.25 MHz. See Figure 24 for termination.
Current Consumption, Output Disabled with Termination	Idd_od_wt	–	39	–	mA	Including load termination current for 5 pF loading at 156.25 MHz. See Figure 24 for termination. Driver output is at logic-high voltage levels.
Output Characteristics						
Output High Voltage	VOH	0.8	0.9	1.15	V	See Figure 5
Output Low Voltage	VOL	-0.3	0	0.1	V	See Figure 5
Output Differential Voltage Swing	V_Swing	1.55	1.65	1.9	V	See Figure 6
Rise/Fall Time	Tr, Tf	–	520	–	ps	Measured 20% to 80%. See Figure 6
Differential Asymmetry, peak-peak	V_da	–	550	–	mV	See Figure 9
Differential Skew, peak	V_ds	–	±30	–	ps	See Figure 10
Overshoot Voltage, peak	V_ov	–	10	–	%	Measured as percent of V_Swing; see Figure 11
Power Supply Noise Immunity						
Power Supply-Induced Jitter Sensitivity[2]	PSJS	–	0.01	–	ps/mV	Power supply ripple from 1 kHz to 20 MHz
Power Supply-Induced Phase Noise	PSPN	–	-80	–	dBc	156.25 MHz, 50 mV peak-peak ripple on VDD

Table 13. Electrical Characteristics – Low Power HCSL | Supply voltage ("order code"): 1.8 V ±5% ("18"), 1.71 V to 3.63 V ("YY")

Parameter	Symbol	Min.	Typ.	Max.	Unit	Condition
Current Consumption, f = 156.25 MHz						
Current Consumption, Output Enabled without Termination	Idd_oe_nt	–	35	–	mA	Excluding load termination current
Current Consumption, Output Enabled with Termination	Idd_oe_wt	–	37	–	mA	Including load termination current for 5 pF loading at 156.25 MHz. See Figure 24 for termination
Current Consumption, Output Disabled with Termination	Idd_od_wt	–	39	–	mA	Including load termination current for 5 pF loading at 156.25 MHz. See Figure 24 for termination. Driver output is at logic-high voltage levels.
Output Characteristics						
Output High Voltage	VOH	0.8	0.9	1.15	V	See Figure 5
Output Low Voltage	VOL	-0.3	0	0.1	V	See Figure 5
Output Differential Voltage Swing	V_Swing	1.55	1.65	1.9	V	See Figure 6
Rise/Fall Time	Tr, Tf	–	520	–	ps	Measured 20% to 80%. See Figure 6
Differential Asymmetry, peak-peak	V_da	–	550	–	mV	See Figure 9
Differential Skew, peak	V_ds	–	±30	–	ps	See Figure 10
Overshoot Voltage, peak	V_ov	–	10	–	%	Measured as percent of V_Swing; see Figure 11
Power Supply Noise Immunity						
Power Supply-Induced Jitter Sensitivity[2]	PSJS	–	0.01	–	ps/mV	Power supply ripple from 1 kHz to 20 MHz
Power Supply-Induced Phase Noise	PSPN	–	-80	–	dBc	156.25 MHz, 50 mV peak-peak ripple on VDD

Note:

2. Terminology chosen for clarity; referred to historically as power-supply noise rejection (PSNR).

Table 14. Absolute Maximum Ratings

Attempted operation outside the absolute maximum ratings may cause permanent damage to the part.
Actual performance of the IC is only guaranteed within the operational specifications, not at absolute maximum ratings.

Parameter	Test Conditions	Min.	Max.	Unit
Continuous Power Supply Voltage Range (Vdd)		-0.5	4.0	V
Input Voltage, Maximum	Any input pin	–	Vdd + 0.3	V
Input Voltage, Minimum	Any input pin	-0.3	–	V
Storage Temperature		-65	150	°C
Maximum Junction Temperature		–	130	°C
Soldering Temperature (follow standard Pb-free soldering guidelines)		–	260	°C

Table 15. Thermal Considerations[3]

Package	θ_{JA}, 4 Layer Board (°C/W)	θ_{JC}, Bottom (°C/W)
3225, 6-pin	TBD	TBD

Notes:
3. Refer to JESD51 for θ_{JA} and θ_{JC} definitions, and reference layout used to determine the θ_{JA} and θ_{JC} values in the above table.

Table 16. Maximum Operating Junction Temperature[4]

Max Operating Temperature (ambient)	Maximum Operating Junction Temperature
70°C	TBD
85°C	TBD
95°C	TBD
105°C	TBD

Notes:
4. Datasheet specifications are not guaranteed if junction temperature exceeds the maximum operating junction temperature.

Table 17. Environmental Compliance

Parameter	Test Conditions	Value	Unit
Mechanical Shock Resistance	MIL-STD-883F, Method 2002	10,000	*g*
Mechanical Vibration Resistance	MIL-STD-883F, Method 2007	70	*g*
Soldering Temperature (follow standard Pb free soldering guidelines)	MIL-STD-883F, Method 2003	260	°C
Moisture Sensitivity Level	MSL1 @ 260°C		
Electrostatic Discharge (HBM)	HBM, JESD22-A114	2,000	V
Charge-Device Model ESD Protection	JESD220C101	750	V
Latch-up Tolerance	JESD78 Compliant		

Pin Description

Table 18. Pin Description

Pin	Map	Functionality	
1	OE/NF	Output Enable (OE)	H[5] Specified frequency output L: OUTP (OUTN) held at logic high (low)
		No Function (NF)	H or L or Open: No effect on output frequency or other device functions.
2	NF	No Function	H or L or Open: No effect on output frequency or other device functions
3	GND	Power	VDD Power Supply Ground
4	OUTP	Output	Oscillator output
5	OUTN	Output	Complementary oscillator output
6	VDD	Power	Power supply voltage[6]

Top View

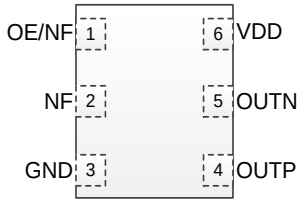

Figure 4. Pin Assignments

Notes:

5. OE pin includes a 120 kΩ internal pull-up resistor to VDD when active high, and a 120 kΩ internal pull-down resistor to GND when active low. In nois environments, OE pin that is active high or active low are recommended to include an external pull-up or pull-down resistor, respectively, of 10 kΩ whe the pin is not externally driven.
6. A capacitor of value 0.1 µF or higher between VDD and GND pins is required.

FlexSwing Configurations

A FlexSwing output-driver performs like LVPECL but provides independent control of voltage swing and DC offset voltage levels. This simplifies interfacing with chipsets having non-standard input voltage requirements and can eliminate all external source-bias resistors. FlexSwing supports power supply voltages from 1.71 V to 3.63 V, and the programmable VOH and VOL levels may be referenced to the voltage on either VDD or GND pins.

Table 19. FlexSwing 2-digit Order Codes specifying VHn and VLn referenced to voltage on VDD pin

Order Code V_Swing (V)			VLn																						
			A	B	C	D	E	F	G	H	J	K	L	M	N	P	Q	R	S	T	U	V	W	X
			Vdd-2.32V	Vdd-2.27V	Vdd-2.22V	Vdd-2.17V	Vdd-2.12V	Vdd-2.07V	Vdd-2.02V	Vdd-1.97V	Vdd-1.92V	Vdd-1.87V	Vdd-1.82V	Vdd-1.78V	Vdd-1.73V	Vdd-1.68V	Vdd-1.63V	Vdd-1.58V	Vdd-1.53V	Vdd-1.48V	Vdd-1.43V	Vdd-1.38V	Vdd-1.33V	Vdd-1.28V
VHn	A	VLn – V_Swing / 2									AJ 1.94	AK 1.86	AL 1.77	AM 1.69	AN 1.61	AP 1.52	AQ 1.44	AR 1.35	AS 1.27	AT 1.18	AU 1.10	AV 1.01	AW 0.93	AX 0.85
	B									BH 1.94	BJ 1.86	BK 1.77	BL 1.69	BM 1.61	BN 1.52	BP 1.44	BQ 1.35	BR 1.27	BS 1.18	BT 1.10	BU 1.01	BV 0.93	BW 0.85	BX 0.76
	C								CG 1.94	CH 1.86	CJ 1.77	CK 1.69	CL 1.61	CM 1.52	CN 1.44	CP 1.35	CQ 1.27	CR 1.18	CS 1.10	CT 1.01	CU 0.93	CV 0.85	CW 0.76	CX 0.68
	D							DF 1.94	DG 1.86	DH 1.77	DJ 1.69	DK 1.61	DL 1.52	DM 1.44	DN 1.35	DP 1.27	DQ 1.18	DR 1.10	DS 1.01	DT 0.93	DU 0.85	DV 0.76	DW 0.68	DX 0.59
	E						EE 1.94	EF 1.86	EG 1.77	EH 1.69	EJ 1.61	EK 1.52	EL 1.44	EM 1.35	EN 1.27	EP 1.18	EQ 1.10	ER 1.01	ES 0.93	ET 0.85	EU 0.76	EV 0.68	EW 0.59	EX 0.51
	F					FD 1.94	FE 1.86	FF 1.77	FG 1.69	FH 1.61	FJ 1.52	FK 1.44	FL 1.35	FM 1.27	FN 1.18	FP 1.10	FQ 1.01	FR 0.93	FS 0.85	FT 0.76	FU 0.68	FV 0.59	FW 0.51	FX 0.42
	G				GC 1.94	GD 1.86	GE 1.77	GF 1.69	GG 1.61	GH 1.52	GJ 1.44	GK 1.35	GL 1.27	GM 1.18	GN 1.10	GP 1.01	GQ 0.93	GR 0.85	GS 0.76	GT 0.68	GU 0.59	GV 0.51	GW 0.42	GX 0.34
	H			HB 1.94	HC 1.86	HD 1.77	HE 1.69	HF 1.61	HG 1.52	HH 1.44	HJ 1.35	HK 1.27	HL 1.18	HM 1.10	HN 1.01	HP 0.93	HQ 0.85	HR 0.76	HS 0.68	HT 0.59	HU 0.51	HV 0.42	HW 0.34	HX 0.25
	J		JA 1.94	JB 1.86	JC 1.77	JD 1.69	JE 1.61	JF 1.52	JG 1.44	JH 1.35	JJ 1.27	JK 1.18	JL 1.10	JM 1.01	JN 0.93	JP 0.85	JQ 0.76	JR 0.68	JS 0.59	JT 0.51	JU 0.42	JV 0.34	JW 0.25	
	K		KA 1.86	KB 1.77	KC 1.69	KD 1.61	KE 1.52	KF 1.44	KG 1.35	KH 1.27	KJ 1.18	KK 1.10	KL 1.01	KM 0.93	KN 0.85	KP 0.76	KQ 0.68	KR 0.59	KS 0.51	KT 0.42	KU 0.34	KV 0.25		
	L		LA 1.77	LB 1.69	LC 1.61	LD 1.52	LE 1.44	LF 1.35	LG 1.27	LH 1.18	LJ 1.10	LK 1.01	LL 0.93	LM 0.85	LN 0.76	LP 0.68	LQ 0.59	LR 0.51	LS 0.42	LT 0.34	LU 0.25			
	M		MA 1.69	MB 1.61	MC 1.52	MD 1.44	ME 1.35	MF 1.27	MG 1.18	MH 1.10	MJ 1.01	MK 0.93	ML 0.85	MM 0.76	MN 0.68	MP 0.59	MQ 0.51	MR 0.42	MS 0.34	MT 0.25				
	N		NA 1.61	NB 1.52	NC 1.44	ND 1.35	NE 1.27	NF 1.18	NG 1.10	NH 1.01	NJ 0.93	NK 0.85	NL 0.76	NM 0.68	NN 0.59	NP 0.51	NQ 0.42	NR 0.34	NS 0.25					
	P		PA 1.52	PB 1.44	PC 1.35	PD 1.27	PE 1.18	PF 1.10	PG 1.01	PH 0.93	PJ 0.85	PK 0.76	PL 0.68	PM 0.59	PN 0.51	PP 0.42	PQ 0.34	PR 0.25						
	Q		QA 1.44	QB 1.35	QC 1.27	QD 1.18	QE 1.10	QF 1.01	QG 0.93	QH 0.85	QJ 0.76	QK 0.68	QL 0.59	QM 0.51	QN 0.42	QP 0.34	QQ 0.25							
	R		RA 1.35	RB 1.27	RC 1.18	RD 1.10	RE 1.01	RF 0.93	RG 0.85	RH 0.76	RJ 0.68	RK 0.59	RL 0.51	RM 0.42	RN 0.34	RP 0.25								
	S		SA 1.27	SB 1.18	SC 1.10	SD 1.01	SE 0.93	SF 0.85	SG 0.76	SH 0.68	SJ 0.59	SK 0.51	SL 0.42	SM 0.34	SN 0.25									
	T		TA 1.18	TB 1.10	TC 1.01	TD 0.93	TE 0.85	TF 0.76	TG 0.68	TH 0.59	TJ 0.51	TK 0.42	TL 0.34	TM 0.25										
	U		UA 1.10	UB 1.01	UC 0.93	UD 0.85	UE 0.76	UF 0.68	UG 0.59	UH 0.51	UJ 0.42	UK 0.34	UL 0.25											
	V		VA 1.01	VB 0.93	VC 0.85	VD 0.76	VE 0.68	VF 0.59	VG 0.51	VH 0.42	VJ 0.34	VK 0.25												
	W		WA 0.93	WB 0.85	WC 0.76	WD 0.68	WE 0.59	WF 0.51	WG 0.42	WH 0.34	WJ 0.25													

Supply Voltage	Available Colors
1.8V±5%	Not Supported
1.71V to 3.63V	Not Supported
2.5V±10%	Blue
3.3V±10%	Blue / Red
2.25V to 3.63V	Blue

The above table identifies supported combinations of nominal VOH (i.e. VHn) and nominal VOL (i.e. VLn) in colored boxes. The two-character code in each box corresponds to the VHn and VLn codes specified in the 2nd column and 2nd row in the table, respectively. The number in each box indicates the nominal differential swing or 2(VHn – VLn).

Example 1 – Suppose a design requires a differential swing (V_Swing) of 1 Vpp with a common-mode voltage of Vdd-1.3 V. If VDD is 2.5 V, and using Table 19, then VOL = Vdd – 1.3 V – (1 Vpp)/4 = 0.95 V. Solving for X in VLn = 2.5 V – X = 0.95 V, we obtain X = 1.55 V, whose closest match is 1.53 V, or column "S" in Table 19. The differential swing in Row D (i.e. 1.01 Vpp) is the closest match to V_Swing = 1 Vpp. Thus, the FlexSwing order code is "DS". The value for VHn may be computed as VLn + V_Swing/2 = 0.95 V + (1.01 Vpp)/2 = 1.455 V. The common mode voltage is VLn + V_Swing/4 = 0.97 V + 1.01V/4 = 1.2225 V.

Table 20. FlexSwing 2-digit Order Codes specifying VHn and VLn referenced to voltage on GND pin

Supply Voltage	Available Colors
1.8V±5%	Green
1.71V to 3.63V	Green
2.5V±10%	Green, Blue
3.3V±10%	Green, Blue, Red
2.25V to 3.63V	Green, Blue

Order Code V_Swing (V)			VLn																													
			A	B	C	D	E	F	G	H	J	K	L	M	N	P	Q	R	S	T	U	V	W	X	Y	Z	1	2	3	4	5
			0.35V	0.4V	0.45V	0.49V	0.54V	0.59V	0.64V	0.69V	0.74V	0.79V	0.84V	0.89V	0.94V	0.99V	1.03V	1.08V	1.13V	1.18V	1.23V	1.28V	1.33V	1.38V	1.43V	1.48V	1.53V	1.57V	1.62V	1.67V	1.72V
VHn	A	VLn – V_Swing / 2																						AX 1.94	AY 1.86	AZ 1.77	A1 1.69	A2 1.61	A3 1.52	A4 1.44	A5 1.35
	B																						BW 1.94	BX 1.86	BY 1.77	BZ 1.69	B1 1.61	B2 1.52	B3 1.44	B4 1.35	B5 1.27
	C																					CV 1.94	CW 1.86	CX 1.77	CY 1.69	CZ 1.61	C1 1.52	C2 1.44	C3 1.35	C4 1.27	C5 1.18
	D																				DU 1.94	DV 1.86	DW 1.77	DX 1.69	DY 1.61	DZ 1.52	D1 1.44	D2 1.35	D3 1.27	D4 1.18	D5 1.10
	E																			ET 1.94	EU 1.86	EV 1.77	EW 1.69	EX 1.61	EY 1.52	EZ 1.44	E1 1.35	E2 1.27	E3 1.18	E4 1.10	E5 1.01
	F																		FS 1.94	FT 1.86	FU 1.77	FV 1.69	FW 1.61	FX 1.52	FY 1.44	FZ 1.35	F1 1.27	F2 1.18	F3 1.10	F4 1.01	F5 0.93
	G																	GR 1.94	GS 1.86	GT 1.77	GU 1.69	GV 1.61	GW 1.52	GX 1.44	GY 1.35	GZ 1.27	G1 1.18	G2 1.10	G3 1.01	G4 0.93	G5 0.85
	H																HQ 1.94	HR 1.86	HS 1.77	HT 1.69	HU 1.61	HV 1.52	HW 1.44	HX 1.35	HY 1.27	HZ 1.18	H1 1.10	H2 1.01	H3 0.93	H4 0.85	H5 0.76
	J															JP 1.94	JQ 1.86	JR 1.77	JS 1.69	JT 1.61	JU 1.52	JV 1.44	JW 1.35	JX 1.27	JY 1.18	JZ 1.10	J1 1.01	J2 0.93	J3 0.85	J4 0.76	J5 0.68
	K														KN 1.94	KP 1.86	KQ 1.77	KR 1.69	KS 1.61	KT 1.52	KU 1.44	KV 1.35	KW 1.27	KX 1.18	KY 1.10	KZ 1.01	K1 0.93	K2 0.85	K3 0.76	K4 0.68	K5 0.59
	L													LM 1.94	LN 1.86	LP 1.77	LQ 1.69	LR 1.61	LS 1.52	LT 1.44	LU 1.35	LV 1.27	LW 1.18	LX 1.10	LY 1.01	LZ 0.93	L1 0.85	L2 0.76	L3 0.68	L4 0.59	L5 0.51
	M												ML 1.94	MM 1.86	MN 1.77	MP 1.69	MQ 1.61	MR 1.52	MS 1.44	MT 1.35	MU 1.27	MV 1.18	MW 1.10	MX 1.01	MY 0.93	MZ 0.85	M1 0.76	M2 0.68	M3 0.59	M4 0.51	M5 0.42
	N											NK 1.94	NL 1.86	NM 1.77	NN 1.69	NP 1.61	NQ 1.52	NR 1.44	NS 1.35	NT 1.27	NU 1.18	NV 1.10	NW 1.01	NX 0.93	NY 0.85	NZ 0.76	N1 0.68	N2 0.59	N3 0.51	N4 0.42	N5 0.34
	P										PJ 1.94	PK 1.86	PL 1.77	PM 1.69	PN 1.61	PP 1.52	PQ 1.44	PR 1.35	PS 1.27	PT 1.18	PU 1.10	PV 1.01	PW 0.93	PX 0.85	PY 0.76	PZ 0.68	P1 0.59	P2 0.51	P3 0.42	P4 0.34	P5 0.25
	Q									QH 1.94	QJ 1.86	QK 1.77	QL 1.69	QM 1.61	QN 1.52	QP 1.44	QQ 1.35	QR 1.27	QS 1.18	QT 1.10	QU 1.01	QV 0.93	QW 0.85	QX 0.76	QY 0.68	QZ 0.59	Q1 0.51	Q2 0.42	Q3 0.34	Q4 0.25	
	R								RG 1.94	RH 1.86	RJ 1.77	RK 1.69	RL 1.61	RM 1.52	RN 1.44	RP 1.35	RQ 1.27	RR 1.18	RS 1.10	RT 1.01	RU 0.93	RV 0.85	RW 0.76	RX 0.68	RY 0.59	RZ 0.51	R1 0.42	R2 0.34	R3 0.25		
	S							SF 1.94	SG 1.86	SH 1.77	SJ 1.69	SK 1.61	SL 1.52	SM 1.44	SN 1.35	SP 1.27	SQ 1.18	SR 1.10	SS 1.01	ST 0.93	SU 0.85	SV 0.76	SW 0.68	SX 0.59	SY 0.51	SZ 0.42	S1 0.34	S2 0.25			
	T						TE 1.94	TF 1.86	TG 1.77	TH 1.69	TJ 1.61	TK 1.52	TL 1.44	TM 1.35	TN 1.27	TP 1.18	TQ 1.10	TR 1.01	TS 0.93	TT 0.85	TU 0.76	TV 0.68	TW 0.59	TX 0.51	TY 0.42	TZ 0.34	T1 0.25				
	U					UD 1.94	UE 1.86	UF 1.77	UG 1.69	UH 1.61	UJ 1.52	UK 1.44	UL 1.35	UM 1.27	UN 1.18	UP 1.10	UQ 1.01	UR 0.93	US 0.85	UT 0.76	UU 0.68	UV 0.59	UW 0.51	UX 0.42	UY 0.34	UZ 0.25					
	V				VC 1.94	VD 1.86	VE 1.77	VF 1.69	VG 1.61	VH 1.52	VJ 1.44	VK 1.35	VL 1.27	VM 1.18	VN 1.10	VP 1.01	VQ 0.93	VR 0.85	VS 0.76	VT 0.68	VU 0.59	VV 0.51	VW 0.42	VX 0.34	VY 0.25						
	W			WB 1.94	WC 1.86	WD 1.77	WE 1.69	WF 1.61	WG 1.52	WH 1.44	WJ 1.35	WK 1.27	WL 1.18	WM 1.10	WN 1.01	WP 0.93	WQ 0.85	WR 0.76	WS 0.68	WT 0.59	WU 0.51	WV 0.42	WW 0.34	WX 0.25							
	X		XA 1.94	XB 1.86	XC 1.77	XD 1.69	XE 1.61	XF 1.52	XG 1.44	XH 1.35	XJ 1.27	XK 1.18	XL 1.10	XM 1.01	XN 0.93	XP 0.85	XQ 0.76	XR 0.68	XS 0.59	XT 0.51	XU 0.42	XV 0.34	XW 0.25								
	Y		YA 1.86	YB 1.77	YC 1.69	YD 1.61	YE 1.52	YF 1.44	YG 1.35	YH 1.27	YJ 1.18	YK 1.10	YL 1.01	YM 0.93	YN 0.85	YP 0.76	YQ 0.68	YR 0.59	YS 0.51	YT 0.42	YU 0.34	YV 0.25									
	Z		ZA 1.77	ZB 1.69	ZC 1.61	ZD 1.52	ZE 1.44	ZF 1.35	ZG 1.27	ZH 1.18	ZJ 1.10	ZK 1.01	ZL 0.93	ZM 0.85	ZN 0.76	ZP 0.68	ZQ 0.59	ZR 0.51	ZS 0.42	ZT 0.34	ZU 0.25										
	1		1A 1.69	1B 1.61	1C 1.52	1D 1.44	1E 1.35	1F 1.27	1G 1.18	1H 1.10	1J 1.01	1K 0.93	1L 0.85	1M 0.76	1N 0.68	1P 0.59	1Q 0.51	1R 0.42	1S 0.34	1T 0.25											
	2		2A 1.61	2B 1.52	2C 1.44	2D 1.35	2E 1.27	2F 1.18	2G 1.10	2H 1.01	2J 0.93	2K 0.85	2L 0.76	2M 0.68	2N 0.59	2P 0.51	2Q 0.42	2R 0.34	2S 0.25												
	3		3A 1.52	3B 1.44	3C 1.35	3D 1.27	3E 1.18	3F 1.10	3G 1.01	3H 0.93	3J 0.85	3K 0.76	3L 0.68	3M 0.59	3N 0.51	3P 0.42	3Q 0.34	3R 0.25													

Example 2 – Suppose a design requires a differential swing of 1 Vpp with a 1.2 V common mode voltage (similar to Example 1 but referenced to ground). Using Table 20, VLn = 1.2 V – (1 Vpp)/4 = 0.95 V, whose closest match is column N. Scanning column N, row W has the closest V_Swing to 1 Vpp, so the FlexSwing order code is “WN”. Here, the resulting V_Swing is 1.01 Vpp, and the common mode voltage is VLn + V_Swing/4 + = 0.94 + (1.01 Vpp)/4 = 1.1925 V.

Waveform Diagrams

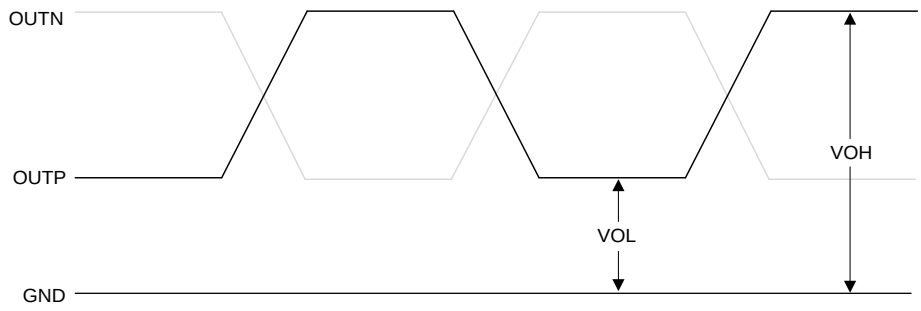

Figure 5. LVPECL, HCSL, Low-Power HCSL, and FlexSwing Voltage Levels per Differential Pin

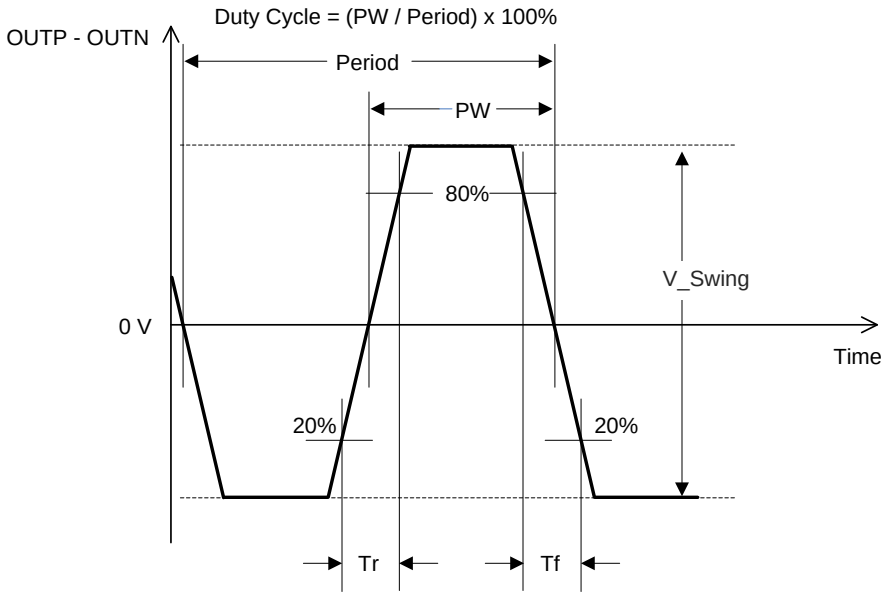

Figure 6. LVPECL, HCSL, Low-Power HCSL, and FlexSwing Voltage Levels Across Differential Pair

Waveform Diagrams (continued)

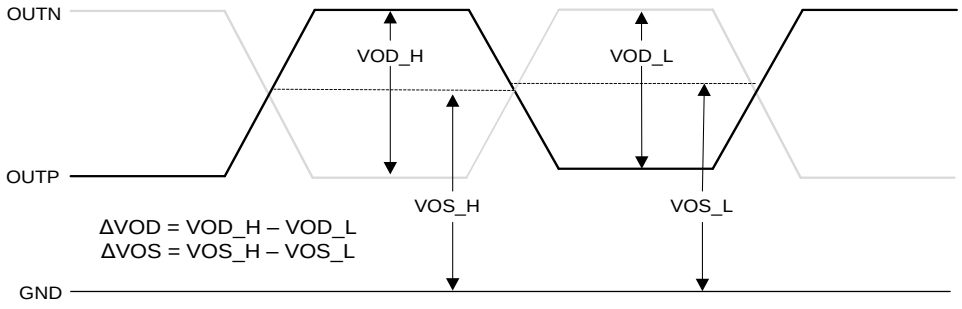

Figure 7. LVDS Voltage Levels per Differential Pin

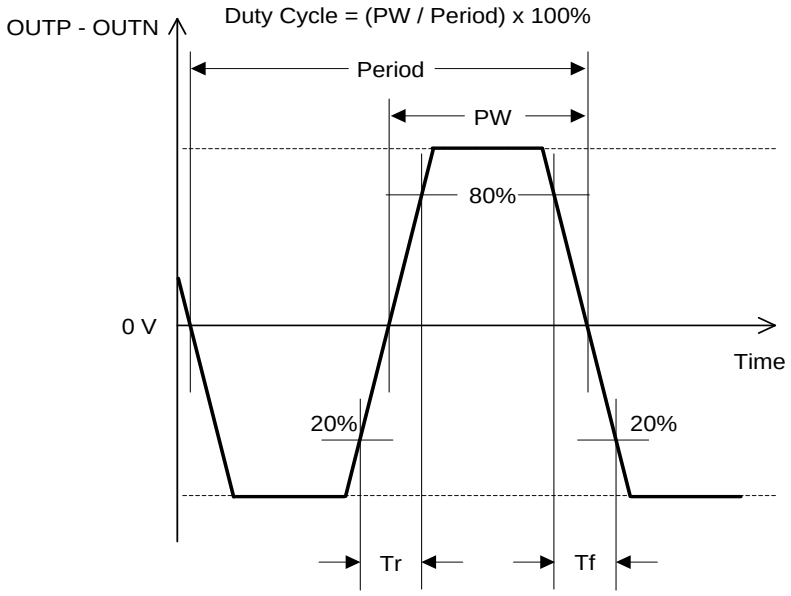

Figure 8. LVDS Differential Waveform

Waveform Diagrams (continued)

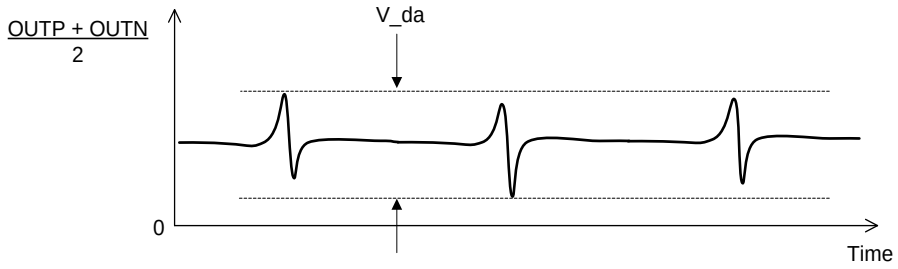

Figure 9. Differential Asymmetry (V_da)

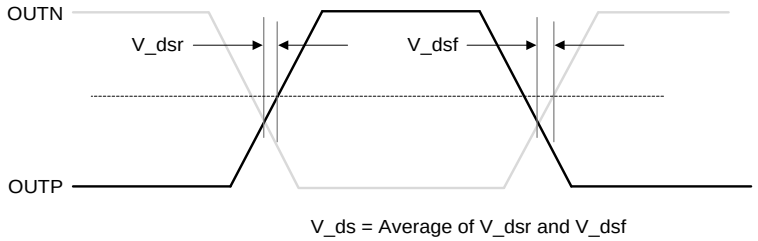

Figure 10. Differential Skew (V_ds) is measured as the Time between the Average Voltage Level and Crossing Voltage

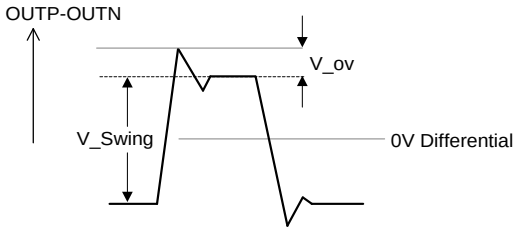

Figure 11. Overshoot Voltage (V_ov) for LVPECL, FlexSwing, HCSL, Low-power HCSL

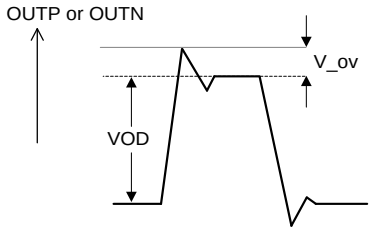

Figure 12. Overshoot Voltage (V_ov) for LVDS Output

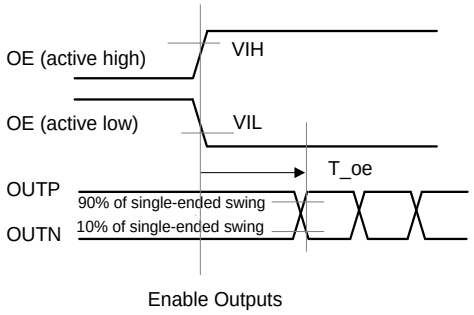

Figure 13. OE Pin Enable Timing (T_oe)

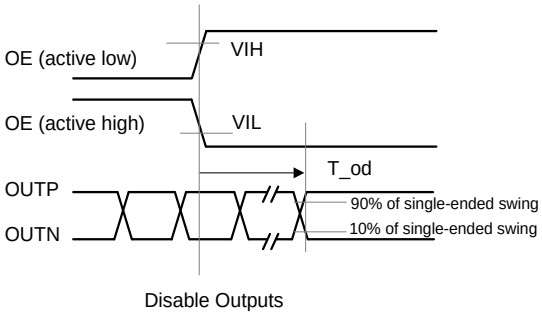

Figure 14. OE Pin Disable Timing (T_od)

Termination Diagrams

LVPECL and FlexSwing Termination

The SiT9501 FlexSwing output drivers support low power without sacrificing signal integrity via simple terminations as shown in Figure 16 and Figure 18, compared to traditional LVPECL drivers. The FlexSwing and LVPECL outputs are voltage-mode drivers. Use the table and figures below to select a termination circuit for the desired supply voltage. The table also provides LVPECL current consumption (I_load) into the load termination.

Table 21. Termination Options for LVPECL and FlexSwing Signaling

Signaling	Supply Voltage Order Codes	Termination Options					
		Figure 15	Figure 16	Figure 17	Figure 18	Figure 19	Figure 20
LVPECL referenced to Vdd	"25", "33", "XX"	OK to use I_load = 40 mA with 100 Ω near-end bias resistor	**Do Not Use**	OK to use I_load = 28 mA	OK to use	OK to use I_load = 28 mA	**Do Not Use**
FlexSwing referenced to Vdd		OK to use[7]	OK to use (see Figure 16 for frequency ranges and voltage swings)	OK to use[7]	OK to use	OK to use	**Do Not Use**
FlexSwing referenced to Gnd	"25", "33", "XX", "YY"			**Do Not Use**	OK to use	**Do Not Use**	**Do Not Use**
	"18"			**Do Not Use**	OK to use	**Do Not Use**	OK to use

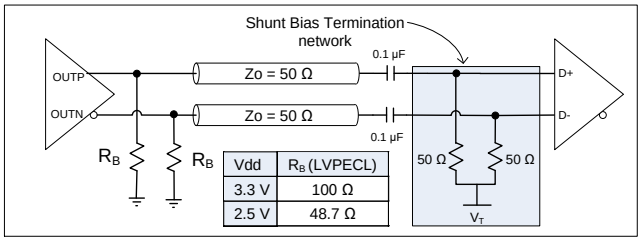

Figure 15. Recommended LVPECL and FlexSwing[8] Termination when AC-coupled

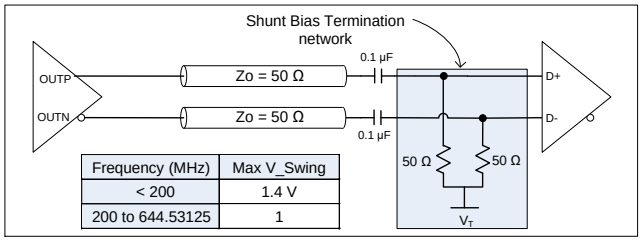

Figure 16. Recommended FlexSwing Termination when AC-coupled

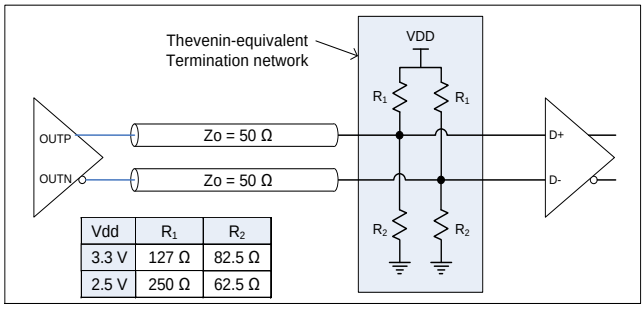

Figure 17. LVPECL and FlexSwing DC-coupled Load Termination with Thevenin Equivalent Network

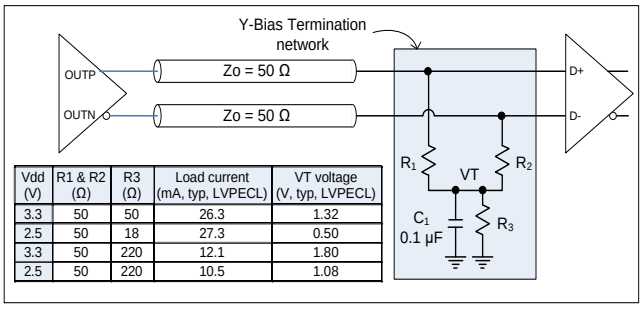

Figure 18. LVPECL and FlexSwing with DC-coupled Parallel Shunt Load Termination

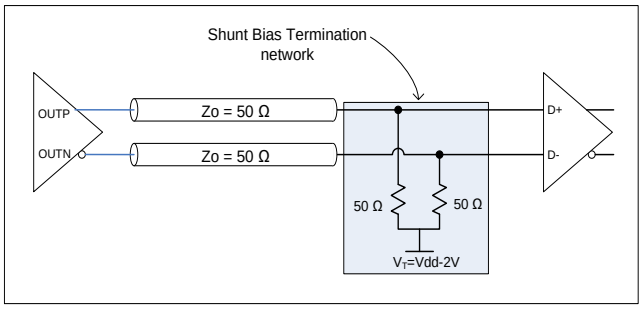

Figure 19. LVPECL and FlexSwing with Y-Bias Termination

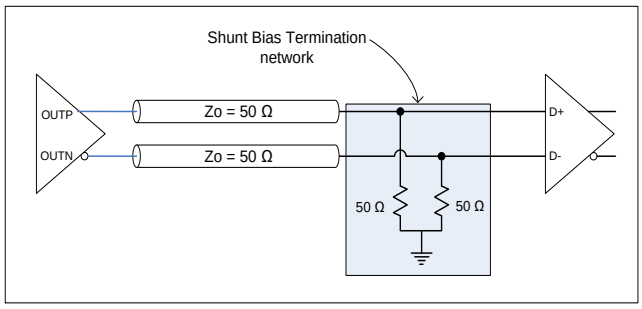

Figure 20. FlexSwing Termination – Only for use with Supply Voltage Order Code "18"

Termination Diagrams (continued)

LVDS, Supply Voltage: 1.8 V ±5%, 2.5 V ±10%, 3.3 V ±10%, 2.25 V to 3.63 V, 1.71 V to 3.63 V

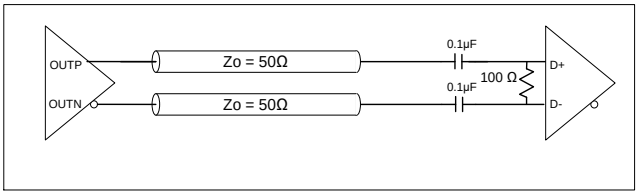

Figure 21. LVDS AC Termination

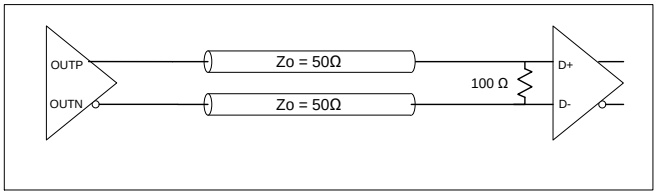

Figure 22. LVDS DC Termination at the Load

HCSL, Supply Voltage: 1.8 V ±5%, 2.5 V ±10%, 3.3 V ±10%, 2.25 V to 3.63 V, 1.71 V to 3.63 V

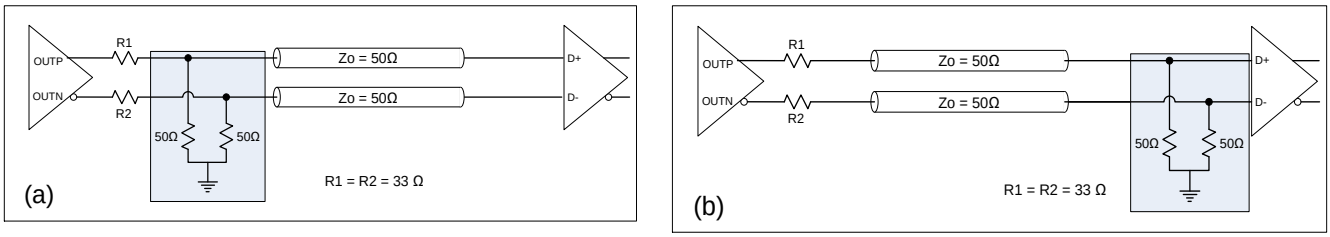

Figure 23. (a) HCSL Source Termination and (b) HCSL Load Termination

Low-power HCSL, Supply Voltage: 1.8 V ±5%, 2.5 V ±10%, 3.3 V ±10%, 2.25 V to 3.63 V, 1.71 V to 3.63 V

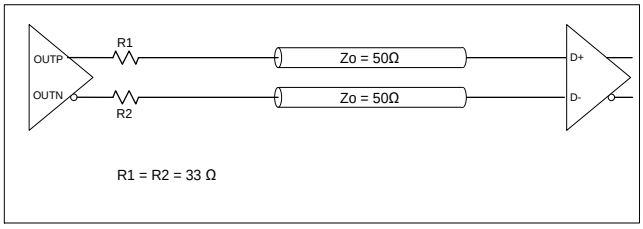

Figure 24. Low-power HCSL Termination

Notes:

7. Contact SiTime for optimum R1 and R2 values for FlexSwing options.
8. Contact SiTime for optimum Rs values for FlexSwing options.

Dimensions and Patterns — 2.0 x 1.6 mm x mm

Package Size – Dimensions (Unit: mm)[9]

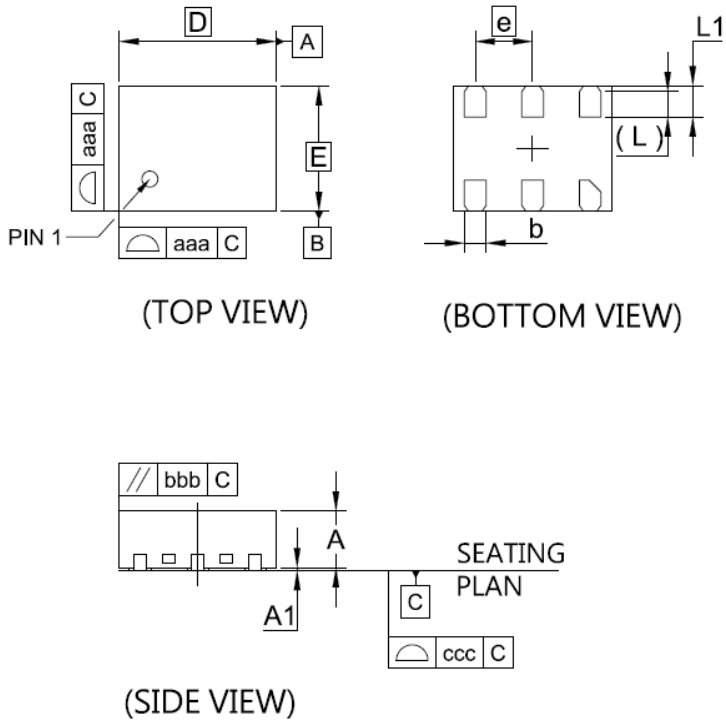

		SYMBOL	MIN	NOM	MAX
TOTAL THICKNESS		A	0.700	0.750	0.800
STAND OFF		A1	0.000	0.035	0.050
BODY SIZE	X	D	2.000 BSC		
	Y	E	1.600 BSC		
LEAD WIDTH		b	0.225	0.275	0.325
LEAD LENGTH		L	0.324 REF		
		L1	0.300	0.400	0.500
LEAD PITCH		e	0.730 BSC		
PACKAGE TOLERNCE		aaa	0.100		
MOLD FLATNESS		bbb	0.100		
COPLANARITY		ccc	0.080		

NOTE

1. ALL DIMENSION IN MM

SiTime			
PKG INFO		DRAWING NO.	
6L PQFD 2.000x1.600X0.750 mm		POD-077-PQFN-006-C02016	
		REV	SHEET
DATE	2020/6/1	A01	01

Recommended Land Pattern (Unit: mm)[10]

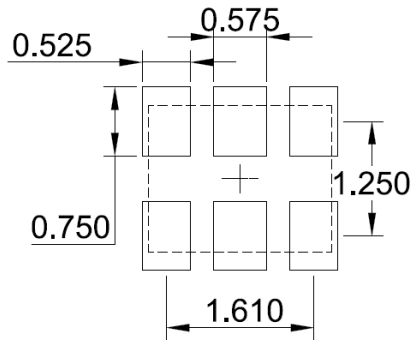

Note : All units in mm.

SiTime			
	PKG INFO	SPL DRAWING NO.	
	6L PQFN 2.000x1.600 mm	SPL-077-PQFN-006-C02016	
DATE		REV	SHEET
2020/04/20		A00	01

Notes:

9. Top Marking: Y denotes manufacturing origin and XXXX denotes manufacturing lot number. The value of "Y" will depend on the assembly location of the device.
10. A capacitor of value 0.1 µF or higher between VDD and GND is required.

Dimensions and Patterns — 2.5 x 2.0 mm x mm

Package Size – Dimensions (Unit: mm)[9]

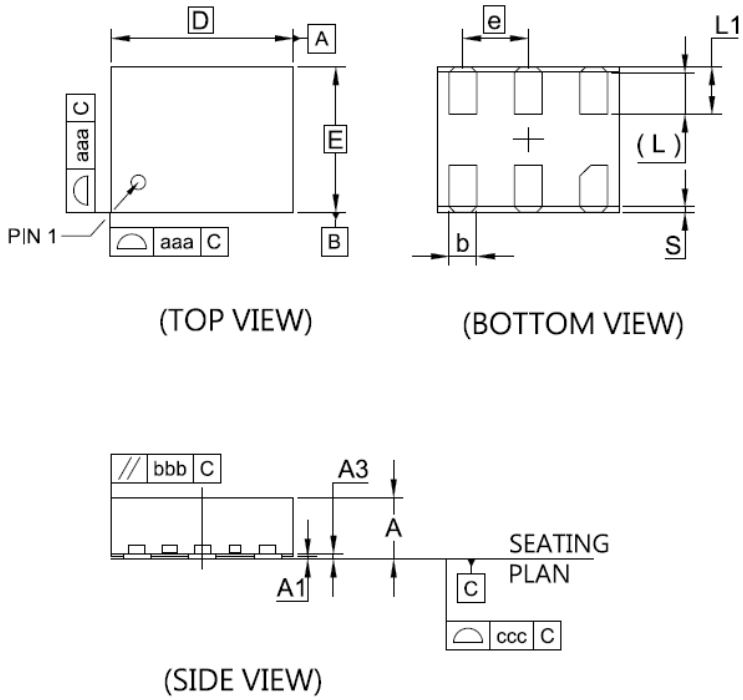

		SYMBOL	MIN	NOM	MAX
TOTAL THICKNESS		A	0.800	0.850	0.900
STAND OFF		A1	0.000	0.035	0.050
BODY SIZE	X	D	2.500 BSC		
	Y	E	2.000 BSC		
LEAD WIDTH		b	0.330	0.380	0.430
LEAD LENGTH		L	0.572 REF		
		L1	0.550	0.650	0.750
LEAD PITCH		e	0.900 BSC		
PACKAGE TOLERNCE		aaa	0.100		
MOLD FLATNESS		bbb	0.100		
COPLANARITY		ccc	0.080		
HALF CUT WIDTH		R	0.075	---	---
HALF CUT DEPTH		A3	---	---	0.075

NOTE

1. ALL DIMENSION IN MM

SiTime			
PKG INFO		DRAWING NO.	
6L PQFD 2.500x2.000X0.850 mm		POD-078-PQFW-006-C02520	
		REV	SHEET
DATE	2020/6/1	A01	01

Recommended Land Pattern (Unit: mm)[10]

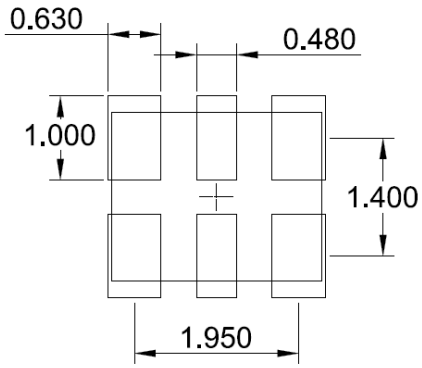

Note : All units in mm.

SiTime	PKG INFO	SPL DRAWING NO.	
	6L PQFW 2.500x2.000 mm	SPL-078-PQFW-006-C02520	
DATE		REV	SHEET
2020/04/20		A00	01

Dimensions and Patterns — 3.2 x 2.5 mm x mm

Package Size – Dimensions (Unit: mm)[9]

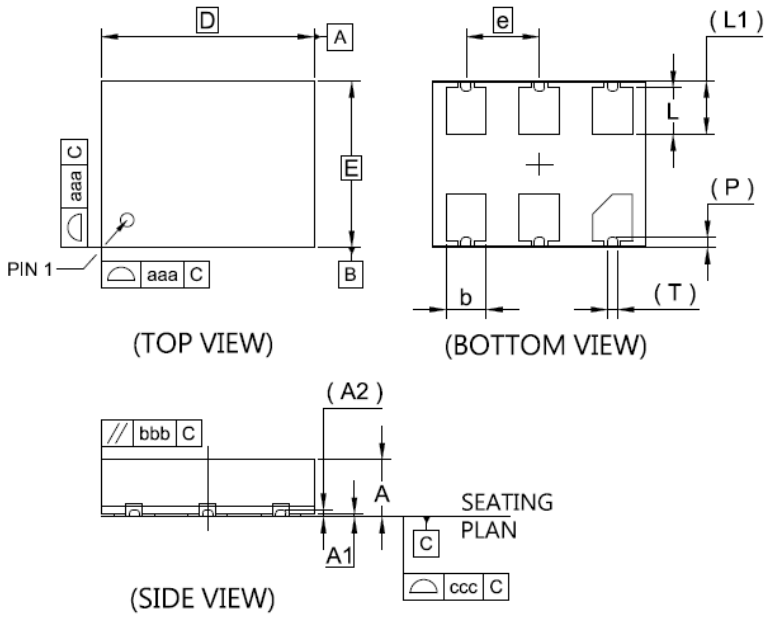

		SYMBOL	MIN	NOM	MAX
TOTAL THICKNESS		A	0.800	0.850	0.900
STAND OFF		A1	0.000	0.035	0.050
BODY SIZE	X	D	3.200 BSC		
	Y	E	2.500 BSC		
LEAD WIDTH		b	0.550	0.600	0.650
LEAD LENGTH		L	0.650	0.700	0.750
		L1	0.800 REF		
LEAD PITCH		e	1.100 BSC		
PACKAGE TOLERNCE		aaa	0.100		
MOLD FLATNESS		bbb	0.100		
COPLANARITY		ccc	0.080		
DIMPLE WIDTH		T	0.150 REF		
DIMPLE LENGTH		P	0.150 REF		
DIMPLE DEPTH		A2	0.100 REF		

NOTE

1. ALL DIMENSION IN MM

SiTime			
PKG INFO		DRAWING NO.	
6L PQFD 3.200x2.500X0.850 mm		POD-076-PQFD-006-C03225	
		REV	SHEET
DATE	2020/6/1	A02	01

Recommended Land Pattern (Unit: mm)[10]

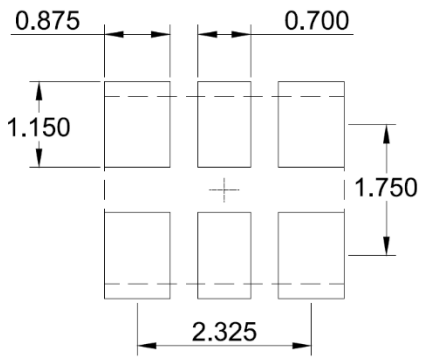

Note : All units in mm.

SiTime			
	PKG INFO	SPL DRAWING NO.	
	6L PQFD 3.200x2.500 mm	SPL-076-PQFD-006-C03225	
DATE		REV	SHEET
2020/04/20		A01	01

Additional Information

Table 22. Additional Information

Document	Description	Download Link
ECCN #: EAR99	Five character designation used on the commerce Control List (CCL) to identify dual use items for export control purposes.	—
HTS Classification Code: 8542.39.0000	A Harmonized Tariff Schedule (HTS) code developed by the World Customs Organization to classify/define internationally traded goods.	—
Manufacturing Notes	Tape & Reel dimension, reflow profile and other manufacturing related info	https://www.sitime.com/support/resource-library/manufacturing-notes-sitime-products
Termination Techniques	Termination design recommendations	http://www.sitime.com/support/application-notes
Layout Techniques	Layout recommendations	http://www.sitime.com/support/application-notes
Evaluation Boards	SiT6760EB	TBD

Revision History

Table 23. Revision History

Revision	Release Date	Change Summary
0.5	27-Apr-2020	Advanced datasheet
0.51	18-May-2020	Formatting changes Fixed typos Added 2016 and 2520 packages
0.52	1-Jun-2020	Formatting changes Updated package drawings
0.53	2-Aug-2020	Modified Termination Diagrams section
0.54	23-Sep-2020	Modified LVPECL, FlexSwing, LVDS current consumption specifications Modified phase jitter specification Added FlexSwing order codes Added 250u T&R order code Changed rev table date format
0.55	23-Oct-2020	Trademarks update Modified termination for HCSL and low-power HCSL rise/fall time specs
0.56	15-Dec-2020	Updated current consumption
0.57	5-Jan-2021	Updated FlexSwing Electrical Characteristics tables and description Formatting updates
0.58	23-Mar-2021	Pg 12 Note 11 update, Provide Flexswing use case example Updated hyperlinks; Changed date format

SiTime Corporation, 5451 Patrick Henry Drive, Santa Clara, CA 95054, USA | **Phone:** +1-408-328-4400 | **Fax:** +1-408-328-4439

© SiTime Corporation 2016-2021. The information contained herein is subject to change at any time without notice. SiTime assumes no responsibility or liability for any loss, damage or defect of a Product which is caused in whole or in part by (i) use of any circuitry other than circuitry embodied in a SiTime product, (ii) misuse or abuse including static discharge, neglect or accident, (iii) unauthorized modification or repairs which have been soldered or altered during assembly and are not capable of being tested by SiTime under its normal test conditions, or (iv) improper installation, storage, handling, warehousing or transportation, or (v) being subjected to unusual physical, thermal, or electrical stress.

Disclaimer: SiTime makes no warranty of any kind, express or implied, with regard to this material, and specifically disclaims any and all express or implied warranties, either in fact or by operation of law, statutory or otherwise, including the implied warranties of merchantability and fitness for use or a particular purpose, and any implied warranty arising from course of dealing or usage of trade, as well as any common-law duties relating to accuracy or lack of negligence, with respect to this material, any SiTime product and any product documentation. Products sold by SiTime are not suitable or intended to be used in a life support application or component, to operate nuclear facilities, or in other mission critical applications where human life may be involved or at stake. All sales are made conditioned upon compliance with the critical uses policy set forth below.

CRITICAL USE EXCLUSION POLICY
BUYER AGREES NOT TO USE SITIME'S PRODUCTS FOR ANY APPLICATION OR IN ANY COMPONENTS USED IN LIFE SUPPORT DEVICES OR TO OPERATE NUCLEAR FACILITIES OR FOR USE IN OTHER MISSION-CRITICAL APPLICATIONS OR COMPONENTS WHERE HUMAN LIFE OR PROPERTY MAY BE AT STAKE.

SiTime owns all rights, title and interest to the intellectual property related to SiTime's products, including any software, firmware, copyright, patent, or trademark. The sale of SiTime products does not convey or imply any license under patent or other rights. SiTime retains the copyright and trademark rights in all documents, catalogs and plans supplied pursuant to or ancillary to the sale of products or services by SiTime. Unless otherwise agreed to in writing by SiTime, any reproduction, modification, translation, compilation, or representation of this material shall be strictly prohibited.